Component Locations

Index

For Troubleshooting of DTC related components. see chart on page 11-52.

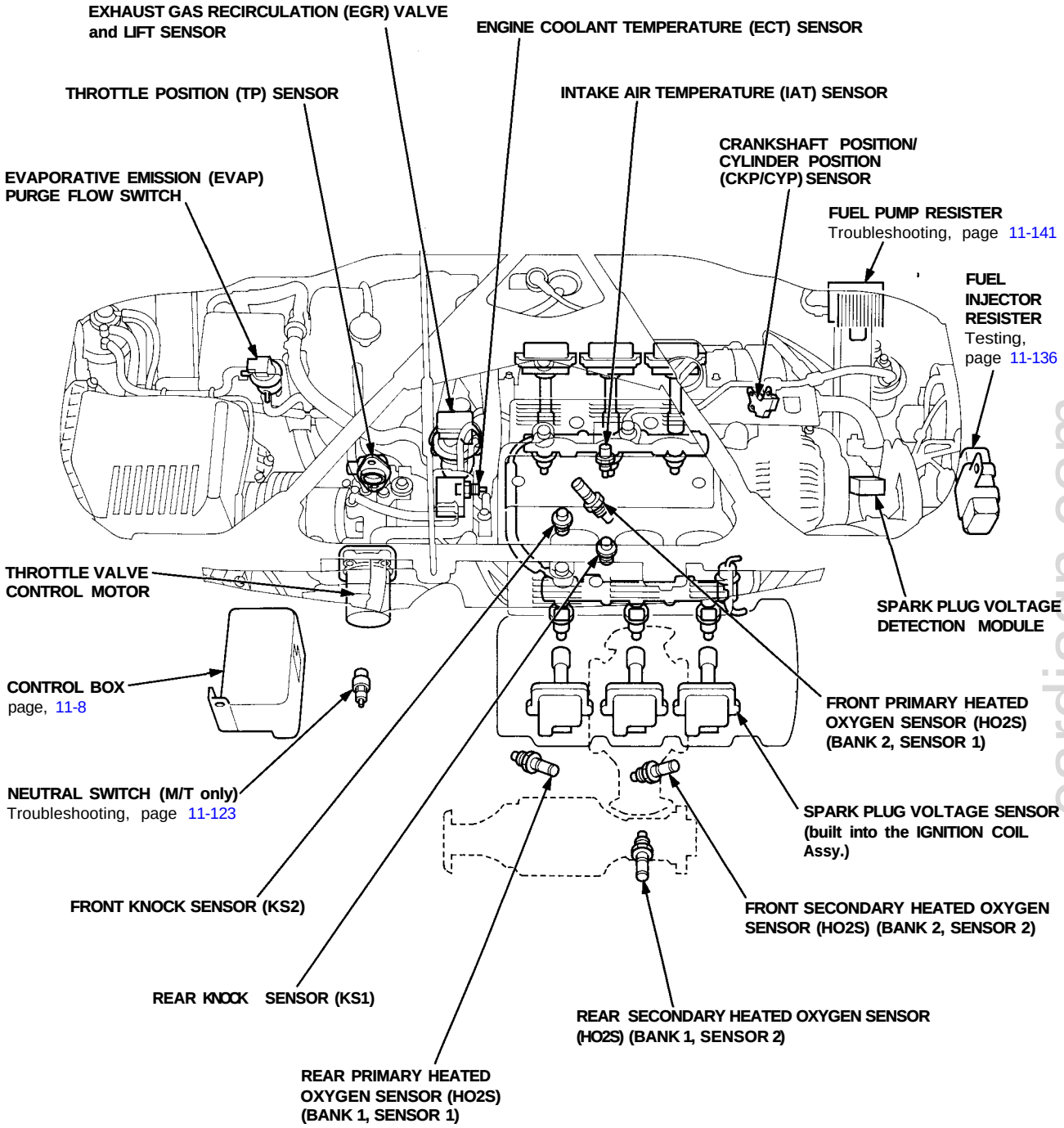

cardiagn.com

(cont'd)

Component Locations

Index (cont'd)

For Troubleshooting of DTC related components, see chart on page 11-52.

CLUTCH SWITCH (M/T only)
Troubleshooting, page 11-124

ACCELERATOR POSITION (AP) SENSOR

THROTTLE CABLE
Inspection/Adjustment, page 11-150
Installation, page 11-150

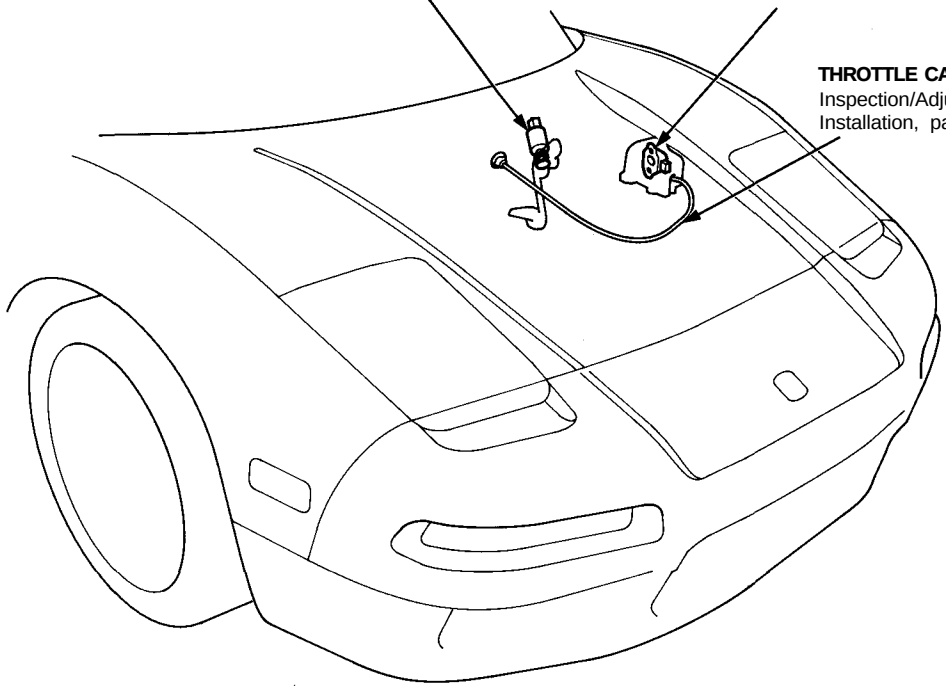

PGM-FI MAIN RELAY
Relay Testing, page 11-143
Troubleshooting, page 11-144

SERVICE CHECK CONNECTOR (2P)
Self-diagnostic Procedures, page 11-38

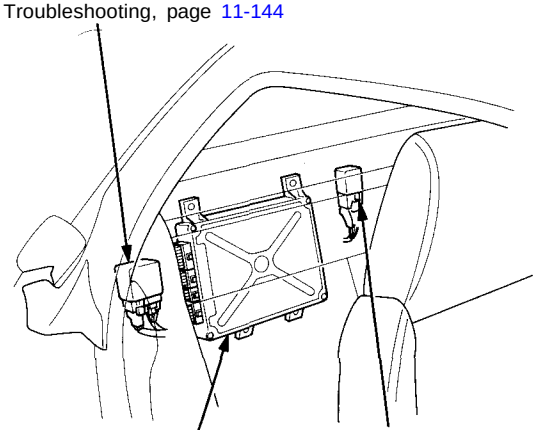

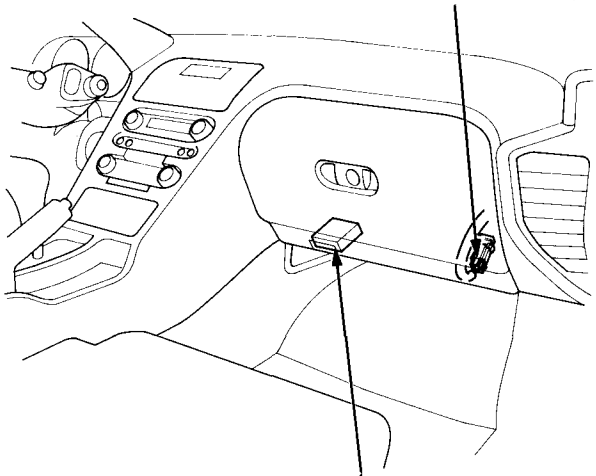

THROTTLE VALVE CONTROL MOTOR RELAY
Troubleshooting, page 11-112

ENGINE CONTROL MODULE (ECM)
Self-diagnostic Procedures, page 11-38
Troubleshooting, page 11-61, and 11-62

DATA LINK CONNECTOR (16P)
Self-diagnostic Procedures, page 11-38

cardiagn.com

For Troubleshooting of DTC related components, see chart on page 11-52.

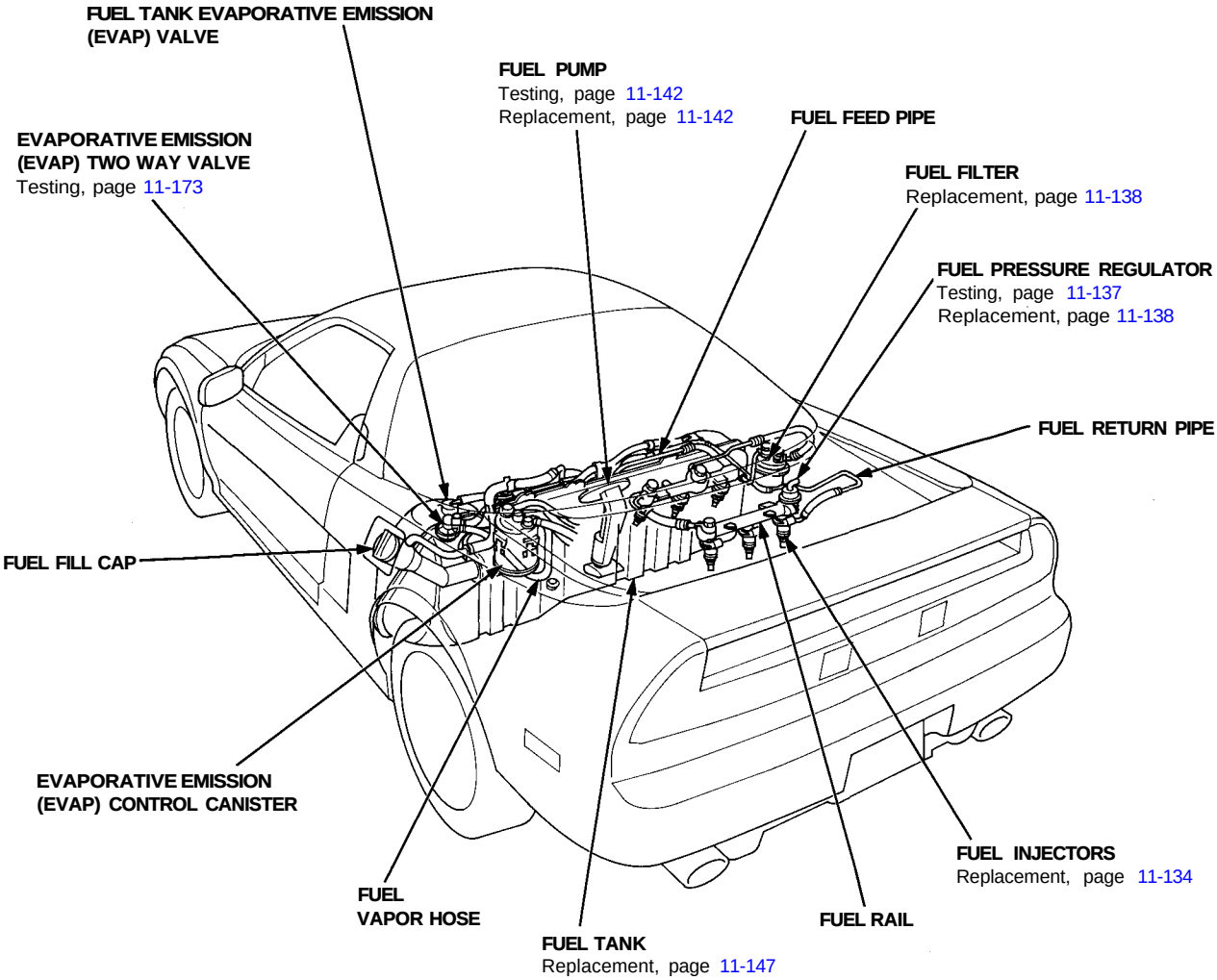

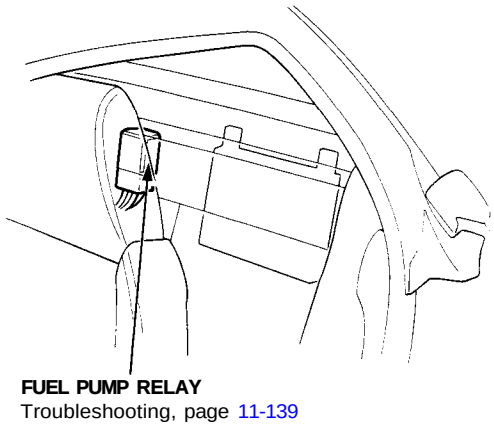

(cont'd)

cardiagn.com

Component Locations

Index (cont'd)

For Troubleshooting of DTC related components, see chart on page 11-52.

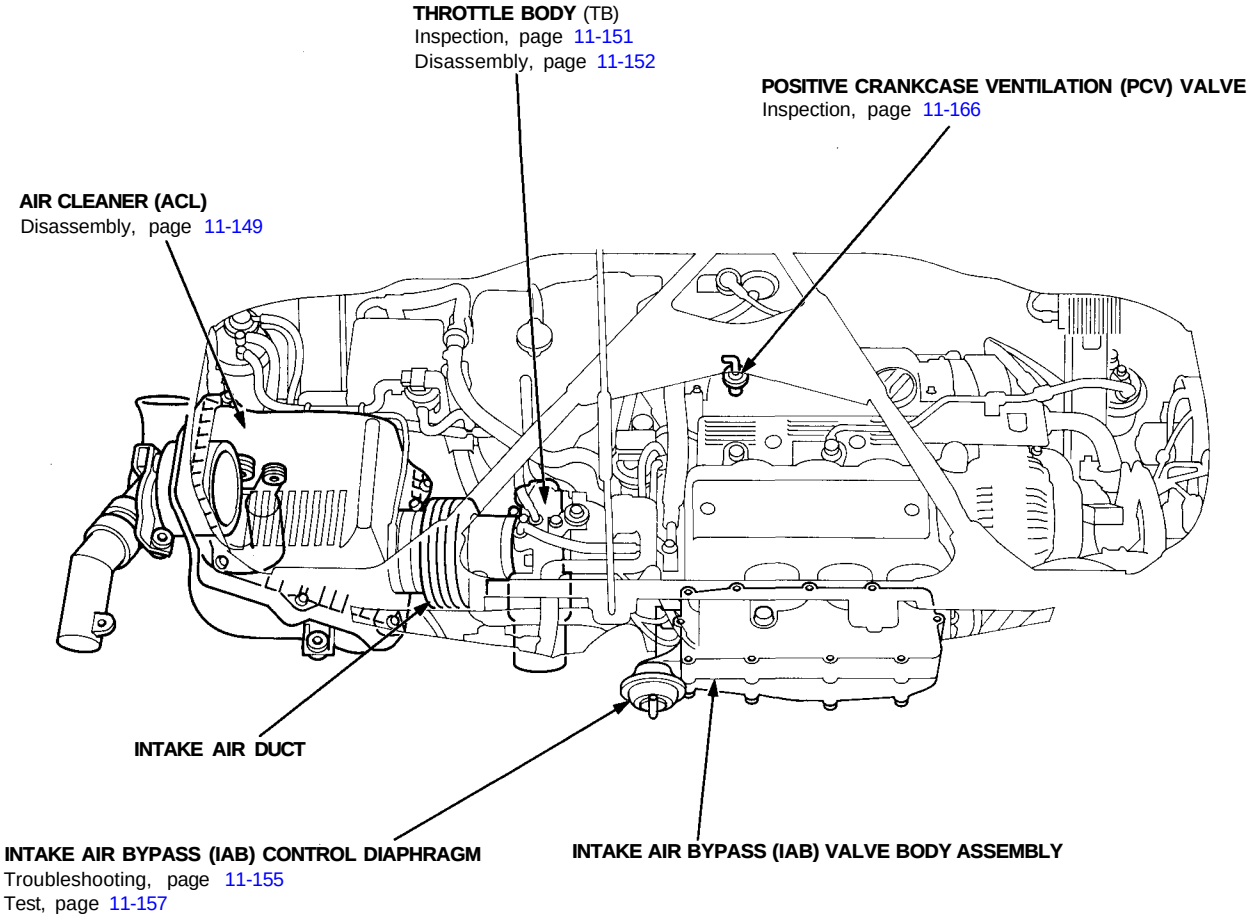

cardiagn.com